SPORTSBOOK CLUB

HIGH BACK

GARY PLATT

UNSURPASSED

SPORTSBOOK CLUB

HIGH BACK

SEAT/BACK FEATURES & OPTIONS

- UPHOLSTERED OUTER BACK STANDARD
- ROCKER OR STATIONARY UNIT
- QUICK-CHANGE SEAT & BACK STANDARD
- UPHOLSTERED COMFORT TOP SEAT & BACK
- HORIZONTAL PULL-DOWN STITCH STANDARD
- THREAD COLOR MATCHING STANDARD
- CUSTOM EMBROIDERED LOGO
- DECORATIVE NAILS
- SPORT STITCH OPTIONAL

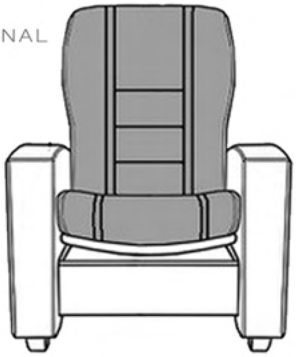

CUSTOM SPORT STITCH

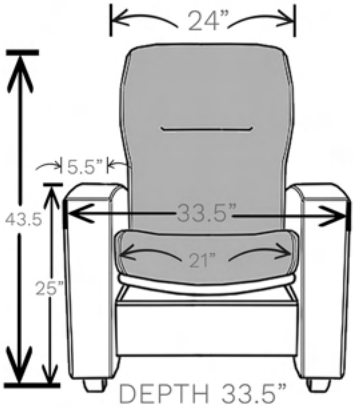

HORIZONTAL PULL-DOWN STITCH

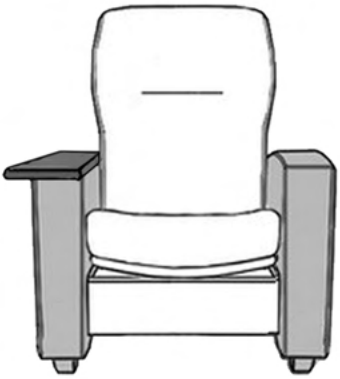

ARM OPTIONS

(SPECIFY LEFT OR RIGHT AS SEATED)

- DUAL USB PORT W/ BUILT IN CONVERTER
- DUAL USB PORT W/ BUILT IN CONVERTER & 110 AC PLUG
- EMBEDDED WIRELESS CHARGER (QI CERTIFIED)
- CUP HOLDER: STAINLESS STEEL, REMOVABLE (3.5” DIAMETER X 2.25” DEEP)
- FLAT TABLET ARM 8.5”W X 31”L (LAMINATE/STAINED EDGES)

LAMINATES FOR TABLT ARM

STANDARD - MATTE BLACK °
UPGRADE - PORTICO TEAK °
UPGRADE - STICKLEY OAK °

SPORTSBOOK CLUB

LOW BACK

GARY PLATT

UNSURPASSED

SPORTSBOOK CLUB

LOW BACK

SEAT/BACK FEATURES & OPTIONS

- UPHOLSTERED OUTER BACK STANDARD
- ROCKER OR STATIONARY UNIT
- QUICK-CHANGE SEAT & BACK STANDARD
- UPHOLSTERED COMFORT TOP SEAT & BACK
- HORIZONTAL PULL-DOWN STITCH STANDARD
- THREAD COLOR MATCHING STANDARD
- CUSTOM EMBROIDERED LOGO
- DECORATIVE NAILS
- SPORT STITCH OPTIONAL

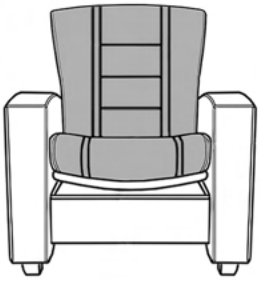

CUSTOM SPORT STITCH

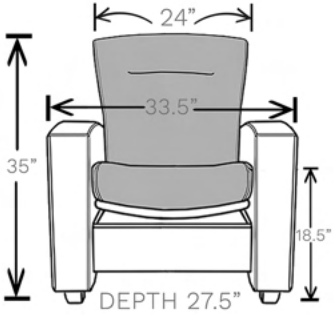

HORIZONTAL PULL-DOWN STITCH

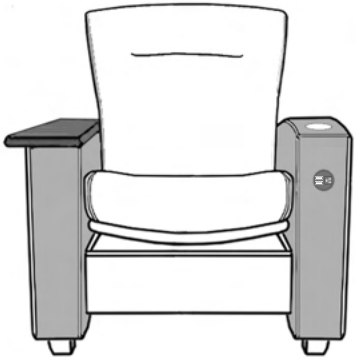

ARM OPTIONS

- DUAL USB PORT W/ BUILT IN CONVERTER
- DUAL USB PORT W/ BUILT IN CONVERTER & 110 AC PLUG
- EMBEDDED WIRELESS CHARGER (QI CERTIFIED)
- CUP HOLDER-STAINLESS STEEL REMOVABLE (3.5" DIAMETER X 2.25" DEEP)
- FLAT TABLET ARM 8.5"W X 31"L (LAMINATE/STAINED EDGES)

LAMINATES FOR TABLT ARM

STANDARD - MATTE BLACK °
UPGRADE - PORTICO TEAK °
UPGRADE - STICKLEY OAK °